CALIPER TOOL SIMPLE VFC

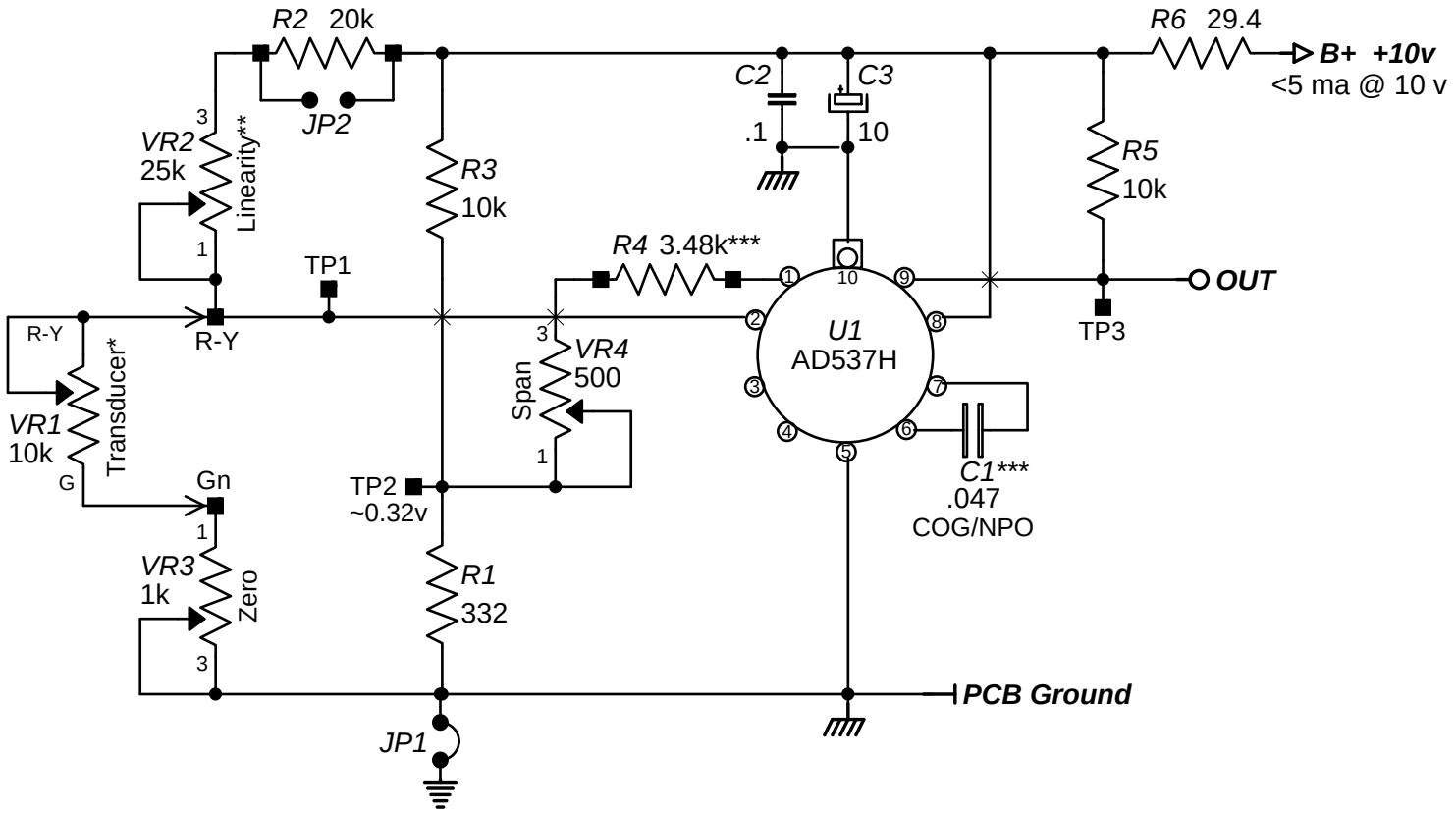

Copyright 2009 by AnaLog Services, Inc. All rights reserved.
Reproduction is unlawful without express written permission.

NOTES:

* Set transducer VR1 for about 500 ohms with the arms fully closed.

** Try 30-35 kilohms for VR2 and R2 combined for typical applications.

*** Select R4 to scale output pulse range (C1 sets full scale max. output).

AnaLog Services, Inc.
1169 Haynesville Road - Reynolds Station, KY 42368 (270) 276-5671 Fax: (270) 276-5588

Caliper Tool Simple VFC		VFC3.sch
Sheet Size: A	Creation Date: 02/26/2009	Drawn By: Syd H. Levine
Revision: 1.0	Modify Date: 03/04/2010	Sheet 1 of 1

www.logwell.com PCB: VFC-3b