TEMPERATURE TOOL SIMPLE VFC

Jim Norman's Minimum Parts Count Circuit

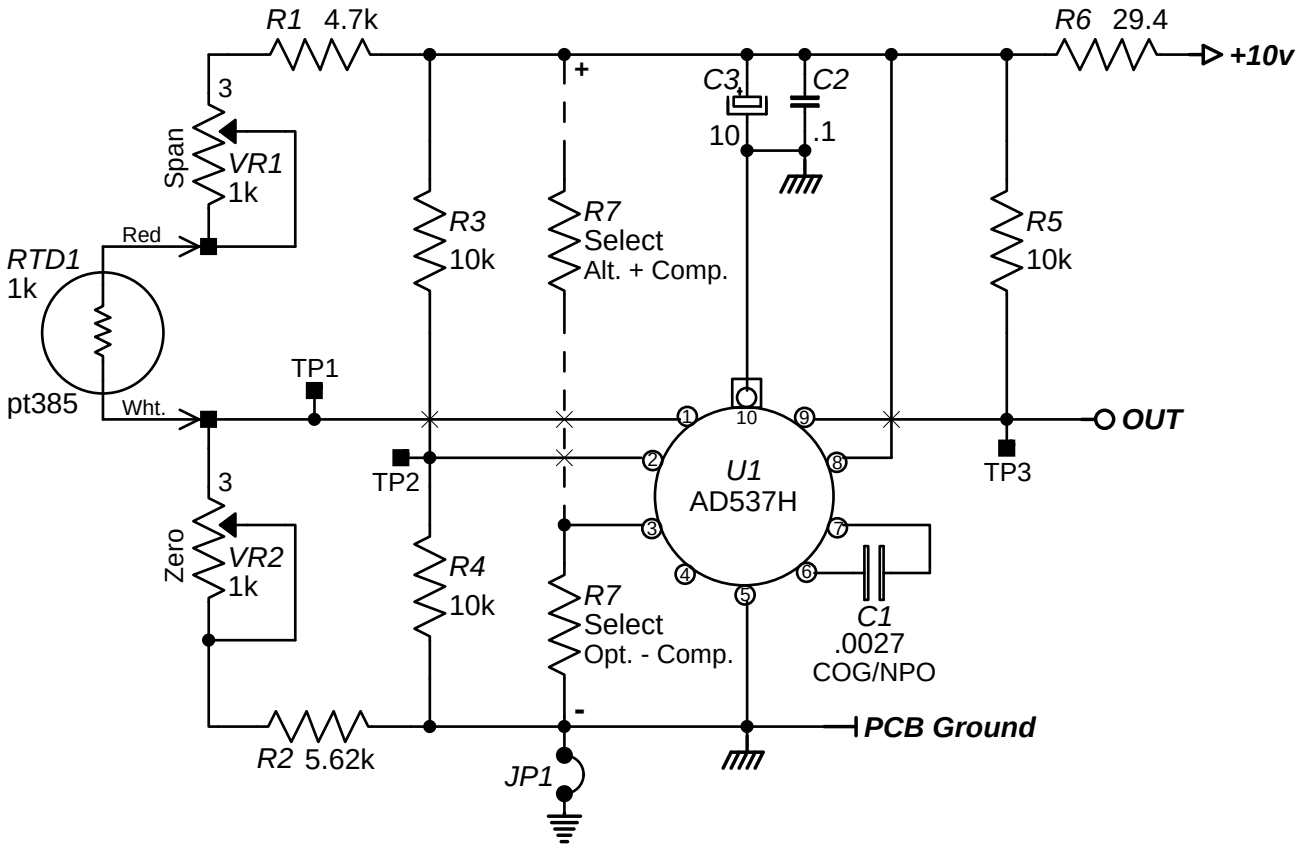

Copyright 2008 by AnaLog Services, Inc. All rights reserved.
Reproduction is unlawful without express written permission.

AnaLog Services, Inc.
1169 Haynesville Road - Reynolds Station, KY 42368 (270) 276-5671 Fax: (270) 276-5588

Temp. Tool Simple VFC		VFC1.sch
Sheet Size: A	Creation Date: 06/03/2008	Drawn By: Syd H. Levine
Revision: 1.0	Modify Date: 11/13/2009	Sheet 1 of 1

www.logwell.com

PCB: VFC-1b